NATIONAL UNIVERSITY OF TECHNOLOGY ISLAMABAD

DEPARTMENT OF COMPUTER SCIENCE

DIGITAL LOGIC DESIGN LAB

Name	**Bisma Fatima**
Roll No	**36**
Batch	**24**
Section	**A**
Lab Number	**07**
Instructor Name	**Mam Tehreem** **Sir Haseeb**
Date of Submission	**May 26, 2025**
Topic Covered	**Implementing Master Slave Flip Flop and 16 x 1 Mux using 8X1 Mux**

Experiment 12

Implementing Master Slave Flip Flop and 16 x 1 Mux using 8X1 Mux

Objective

- To experimentally verify the operation of basic of Master Slave Flip Flop **and 16 x 1 Mux**

Tools/Equipment Requirement

- ICs as required
- Circuit Verse

Theoretical Explanation

Master Slave Flip Flop:

A Master-Slave Flip-Flop is a type of sequential logic circuit made by connecting two flip-flops in series: the Master and the Slave. It's designed to eliminate timing issues that can occur in basic flip-flop designs.

Key Concepts:

1. Structure:

Composed of two flip-flops: Master and Slave. The Master is active when the clock (CLK) is high. The Slave is active when the clock is low.

2. Working:

On the rising edge of the clock, the Master captures the input (J and K). On the falling edge, the Slave takes the output of the Master and produces the final output. This ensures that the output changes only once per clock cycle, making the system edge-triggered and more stable.

Procedure

1. Implement it on Circuit Verse.

CIRCUIT DIAGRAM

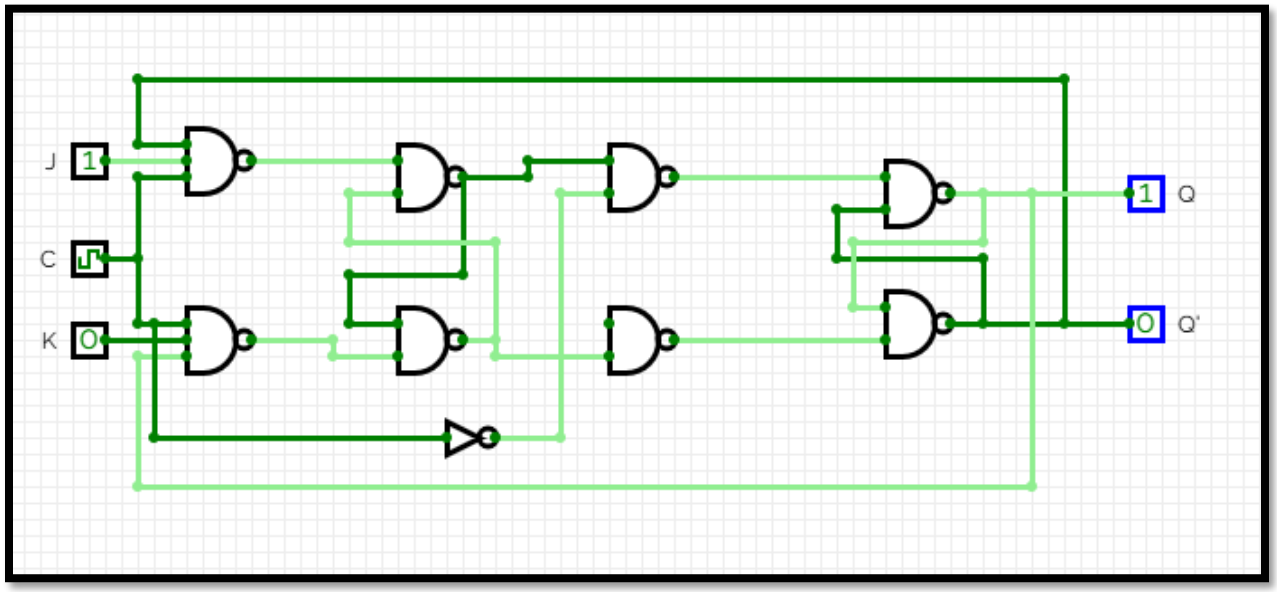

2. Verify and complete the truth table.

TRUTH TABLE

CLK	S (Set)	R (Reset)	Q (Output)	$\bar{Q}$ (Complement)	Description
0	0	0	No Change	No Change	Hold (Slave updates)
0	0	1	Reset	1	Reset (Slave updates)
0	1	0	Set	0	Set (Slave updates)
0	1	1	Invalid	Invalid	Invalid Condition
1	0	0	No Change	No Change	Hold (Master enabled)
1	0	1	Prepare Reset	Prepare 1	Master latches "Reset"
1	1	0	Prepare Set	Prepare 0	Master latches "Set"
1	1	1	Invalid	Invalid	Invalid (Master latch input)

Circuit/Logic Diagram

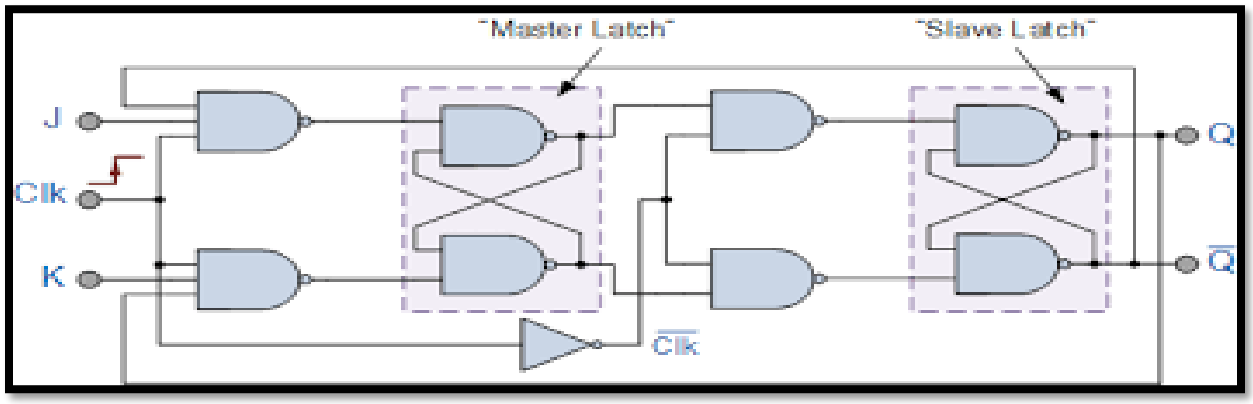

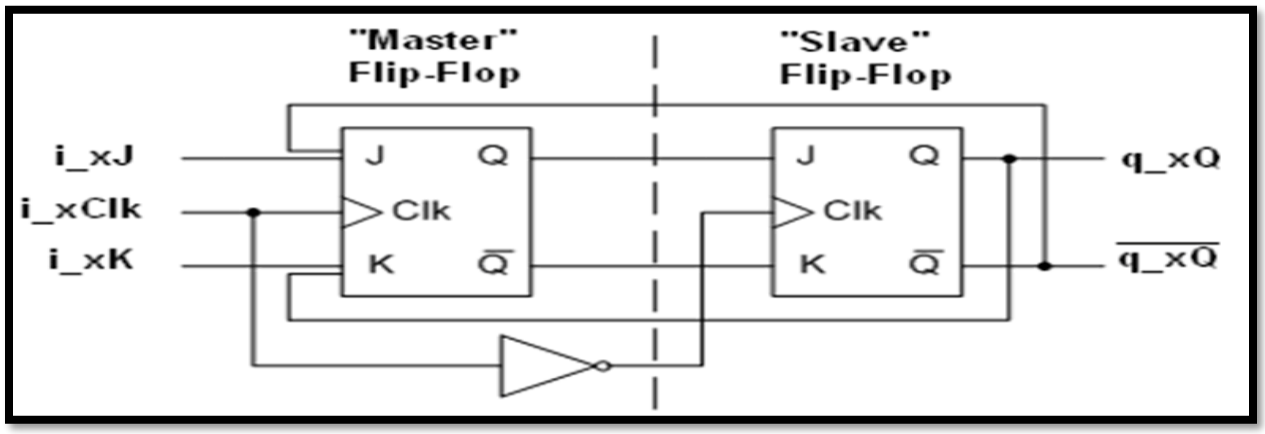

16 x 1 Mux using 8 x 1 Mux

A 16×1 MUX selects one of 16 inputs (I0 to I15) using 4 selection lines (S3 S2 S1 S0). Each 8×1 MUX selects one of 8 inputs using 3 selection lines. Use the 4th select line (S3) to choose which 8×1 MUX's output is forwarded.

Design:

1. Inputs:

First 8×1 MUX → Inputs: I0 to I7

Second 8×1 MUX → Inputs: I8 to I15

2. Select Lines:

Both 8×1 MUXes share S2, S1, S0 as their select lines.

3. Output Selection:

Use a 2×1 MUX or a logic gate (based on S3) to select the final output from the two 8×1 MUX outputs.

Procedure:

1. Design on Circuit Verse.

CIRCUIT DIAGRAM

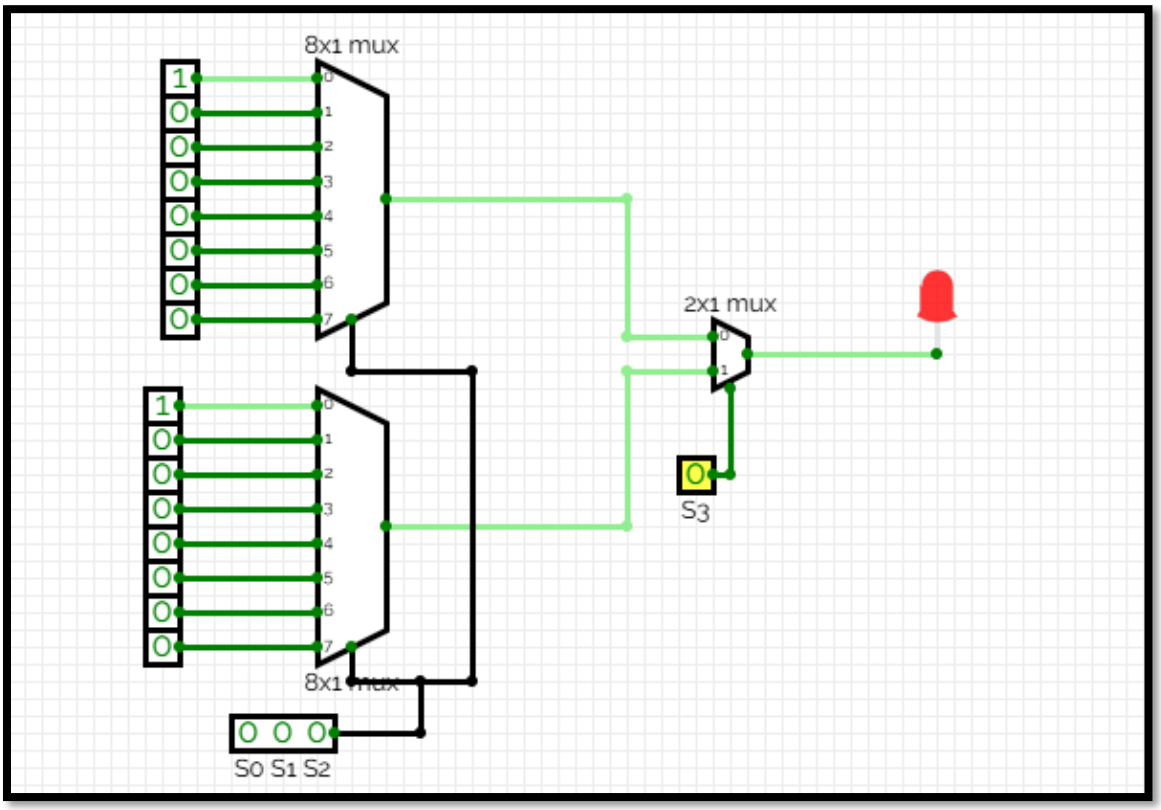

2. Verify the truth table.

TRUTH TABLE

S3	S2	S1	S0	E	Output Y
X	X	X	X	H	H
L	L	L	L	L	D0
L	L	L	H	L	D1
L	L	H	L	L	D2
L	L	H	H	L	D3
L	H	L	L	L	D4
L	H	L	H	L	D5
L	H	H	L	L	D6
L	H	H	H	L	D7

H	L	L	L	L	D8
H	L	L	H	L	D9
H	L	H	L	L	D10
H	L	H	H	L	D11
H	H	L	L	L	D12
H	H	L	H	L	D13
H	H	H	L	L	D14
H	H	H	H	L	D15

Observations/Truth Table

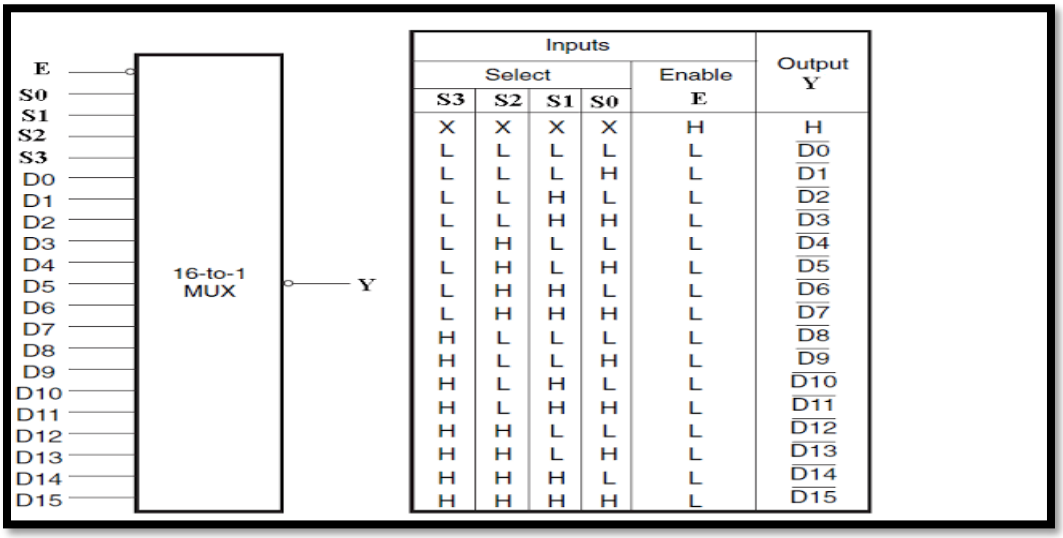

Inputs					Output
Select				Enable	Y
S3	S2	S1	S0	E	
X	X	X	X	H	H
L	L	L	L	L	$\overline{D0}$
L	L	L	H	L	$\overline{D1}$
L	L	H	L	L	$\overline{D2}$
L	L	H	H	L	$\overline{D3}$
L	H	L	L	L	$\overline{D4}$
L	H	L	H	L	$\overline{D5}$
L	H	H	L	L	$\overline{D6}$
L	H	H	H	L	$\overline{D7}$
H	L	L	L	L	$\overline{D8}$
H	L	L	H	L	$\overline{D9}$
H	L	H	L	L	$\overline{D10}$
H	L	H	H	L	$\overline{D11}$
H	H	L	L	L	$\overline{D12}$
H	H	L	H	L	$\overline{D13}$
H	H	H	L	L	$\overline{D14}$
H	H	H	H	L	$\overline{D15}$

Circuit/Logic Diagram

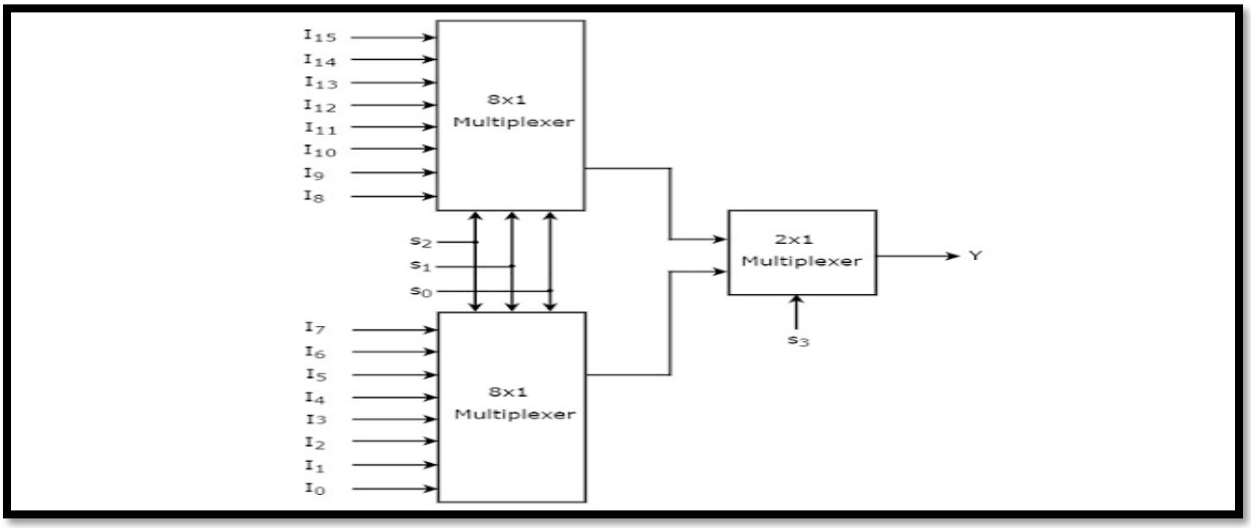

Learning Outcomes

- Study edge-triggered vs. level-triggered flip-flops.
- Reduce timing glitches in digital circuits.
- Apply hierarchical design principles for multiplexer (MUX) cascading.
- Use selection-line partitioning for efficient MUX grouping.
- Handle ICs like 74151 and 7476.
- Verify truth tables.
- Simulate circuits using tools like CircuitVerse.